Cast steel Down Storm Globe valves for Marine 5K/10K

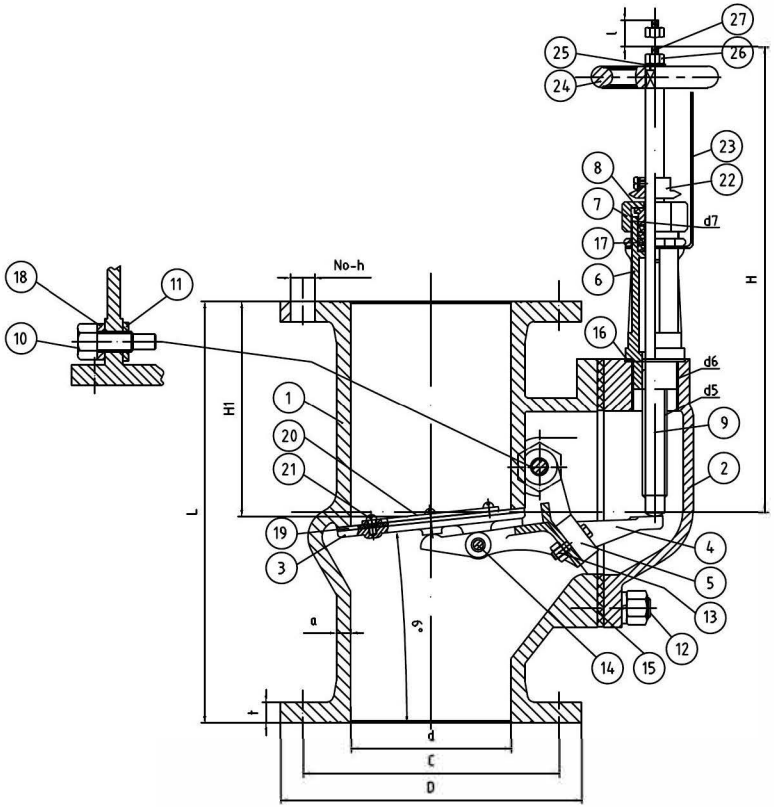

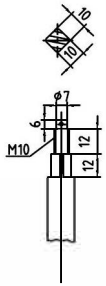

Test pressure

Nominal Pressure	Strengh testing pressure	Seat testing pressure
5K/10K	0.5MPa	0.2MPa

5k

DN	d	L	D	C	No-n	M	t	H	l	a	d5	d6	d7
50	50	210	130	105	4-15	M12	14	290	38	8	TW20	M38X2	M36X2
65	65	240	155	130	4-15	M12	14	290	45	9	TW20	M38X2	M36X2
80	80	260	180	145	4-19	M16	14	290	45	9	TW20	M38X2	M36X2
100	100	280	200	165	8-19	M16	16	290	50	10	TW20	M38X2	M36X2
125	125	330	235	200	8-19	M16	16	290	50	11	TW20	M38X2	M36X2
150	150	360	265	230	8-19	M16	18	290	55	12	TW20	M38X2	M36X2
200	200	450	320	280	8-23	M20	20	290	62	14	TW20	M38X2	M36X2

10k

DN	d	L	D	C	No-n	M	t	H	l	a	d5	d6	d7
50	50	210	155	120	4-19	M16	16	290	38	8	TW20	M38X2	M36X2
65	65	240	175	140	4-19	M16	18	290	45	9	TW20	M38X2	M36X2
80	80	260	185	150	8-19	M16	18	290	45	9	TW20	M38X2	M36X2
100	100	280	210	175	8-19	M16	18	290	50	10	TW20	M38X2	M36X2
125	125	330	250	210	8-23	M20	20	290	50	11	TW20	M38X2	M36X2
150	150	360	280	240	8-23	M20	22	290	55	12	TW20	M38X2	M36X2
200	200	450	330	290	12-23	M20	22	290	62	14	TW20	M38X2	M36X2

NO.	Description	Material
27	Split pin	A3
26	Nut	Q235A
25	Cushion	Q235A
24	Handwheel	FC200
23	Staff	H62
22	Staff	H62
21	Set screw for gasket	Q235A
20	Set plate for gasket	304
19	Gasket	oil resistant synthetic rubber
18	Gasket	Expanded graphite
17	Packing	Expanded graphite
16	Gasket	Expanded graphite
15	Gasket	Expanded graphite
14	Nut	H62
13	Nut	Q235A
12	Nut	Q235A
11	Washer	H62
10	Valve axle	2Cr13
9	Spindle	2Cr13
8	Packing gland	H62
7	Packing gland nut	H62
6	Spindle box	H62
5	Counterweight	Pb
4	Closing arm for valve piate	H62 / SUS304
3	Valve piate	H62
2	Cover	ZG230-450
1	Body	ZG230-450

Note	Handle	NO.	Sign	Date
Design			Revi..ew	

DRAWING

JISF3060-5K/10K

Note	QTY	Weight	Proportion